NORTHERN RENEGADES

SPRINT CAR SERIES



2027

General, Safety and Event Rules
Traditional Sprint Specifications
Wing Sprint Specifications

Revised: November 21, 2026

This rule book governs all Northern Renegade Sprint Car Series events.
All participants are responsible for knowing and complying with the rules contained herein.

RULE BOOK

Table of Contents

PART I — GENERAL, SAFETY AND EVENT RULES 4

Northern Renegade Officials 4

Spirit of the Rule 4

Rule Book Disclaimer 4

Participant Specifications 4

Conduct & Sportsmanship 6

Car & Driver Safety Requirements 8

Order of Events 11

Event Rules 14

Engine Protest Rule 18

Flags 19

PART II — TRADITIONAL SPRINT SPECIFICATIONS 21

Engine Specifications 21

360 Engine 21

5.3 Liter LS Engine 24

GM 602 Sealed Engine 27

Dyno Rule 27

Car Construction & Chassis Specifications (both Traditional and Wing) 27

PART III — WING SPRINT SPECIFICATIONS 32

Engine Specifications 32

360 Engine 32

5.3 Liter LS Engine 35

Chevrolet 604 Crate Engine 38

Dyno Rule 38

Car Construction & Chassis Specifications 38

Tires 38

Wing Specifications 38

PART I — GENERAL, SAFETY AND EVENT RULES

Northern Renegade Officials

President	Caley Emerson	(218) 398-7807
Technical Director	Ben Lapatka	(320) 979-0319
Competition Director	Jonathan Powers	(218) 590-7388

Board of Directors: Caley Emerson, Myles Tomlinson, Ron Bernhagen

Spirit of the Rule

Although every effort has been made to provide complete, accurate, and clearly written rules, the NRSS cannot possibly anticipate every situation or circumstance. With this in mind, the NRSS will apply the “Spirit of the Rule” in all decision-making. The “Spirit of the Rule” refers to the original intent of each rule and classification. Any adjustment, alteration, modification, or replacement not covered by the written rules should not be assumed to be legal under the “Spirit of the Rule.” The “Spirit of the Rule” is the final criterion by which rules will be interpreted and enforced.

Rule Book Disclaimer

The rules and regulations set forth herein are designed to provide for the orderly conduct of racing events and to establish minimum acceptable requirements for such events. The rules govern all events, and by participating in these events, all participants agree to comply with the rules. No express or implied warranty of safety results from the publication of, or compliance with, the rules and regulations. The rules are intended as a guide for the conduct of the sport and are in no way a guarantee against injury or death to a participant, spectator, or official.

NRSS officials are empowered to permit deviations from any specification herein, or to impose further restrictions that, in the official’s opinion, do not alter the minimum acceptable requirements. No express or implied warranty of safety results from such alteration of specifications. All interpretations of, and deviations from, the rules are left to the discretion of NRSS officials. The NRSS official’s decision is final.

NRSS Technical Officials have full authority, at the discretion of the NRSS official in charge, to make decisions on behalf of the NRSS. A NRSS Technical Official may disqualify any competitor, at any time, for rule violations, hazardous equipment, or hazardous actions. Approval of a vehicle for competition by a NRSS Technical Official is not a guarantee that the inspected vehicle is mechanically sound. NRSS Technical Officials are not liable for any mechanical failure or for any losses, injuries, or death resulting from inspections.

Participant Specifications

License

All drivers competing in an NRSS event must hold a current NRSS Sprint Car driver’s license. A driver will not be allowed on the race surface until a completed license application has been submitted to the NRSS. The license application is available at www.nrsprints.com. The cost of an annual license is noted on the application.

Age Restriction

Drivers must be at least 17 years old to compete in either Sprint Car division. A driver who is 14, 15, or 16 years old and has previous experience may be granted permission by the series owner for a three-race trial period. If the driver's ability is deemed satisfactory during the trial, the driver will be allowed to continue competing. Racetrack management may also impose age restrictions that override NRSS age limits. Drivers with questions about age restrictions at a particular racetrack should check with track management to determine the age restrictions in effect at the track where they wish to compete. NRSS may require a rookie competitor to use a series-issued carburetor restriction plate at any time.

Participant

Every driver, car owner, partner, mechanic, crew member, or other pit personnel taking part in any NRSS-sanctioned racing event is a participant. All participants are voluntarily involved in NRSS-sanctioned racing events, with the full understanding that all participants must abide by all NRSS rules and regulations. By voluntarily participating in an NRSS-sanctioned racing event, all participants acknowledge that they are fully aware of the risks involved in the sport of auto racing and that, by participating, they assume all such risks. This acknowledgment extends to all licensed NRSS drivers entering the pit area, whether racing or not.

Any driver who makes, or has previously made, part or all of their living driving a Sprint Car or any other type of race car is not eligible to compete in any NRSS event.

Rookies

For their first three race nights, all rookies will start each race from the back of the field. Rookies may be required to start at the back for more than three weeks at the discretion of NRSS officials. In addition, rookies must display an NRSS rookie flag on their race car for the entirety of the rookie's first season. Rookie points will be based on the driver's best 12 events.

Transponders

A functional transponder is mandatory and must be mounted vertically, behind the most forward right front upright of the frame.

Radios

The use of functional Raceceiver radios by all drivers in competition is mandatory.

Drivers' Meeting

One member of each team must attend the drivers' meeting. Any foreseeable changes to the program or format will be announced at the drivers' meeting, if possible, at that time. Announced changes always take precedence over the written rules for that event. The draw will be held either by the track or by the NRSS immediately following the drivers' meeting. Drivers who miss the drivers' meeting may not be allowed to draw or compete, at the discretion of NRSS officials.

Decals

All cars must display the official NRSS partner decals. Cars must display decals on the outside of both side panels of the top wing, on both sides of the body of the car, or as designated by the NRSS. If current decals are included in the car's wrap, the decals must be the same size as those provided by the series (a minimum of 11 inches long by 4 inches wide). As a show of appreciation for a partner's contribution to the NRSS, car owners are highly encouraged to display NRSS partner decals in a way that benefits the partner. Failure to display series partner decals may result in disqualification.

Conduct & Sportsmanship

Conduct

All NRSS participants are guests at each track the NRSS visits. All participants are reminded to conduct themselves accordingly. This includes leaving the pit stall clean at the end of the night.

Driver Responsibility

The driver is responsible for the actions of the driver's pit crew. The driver is the sole spokesperson for the car owner and pit crew in any and all matters and is accountable to NRSS and track officials in all matters regarding team members' conduct or behavior.

Drugs and Alcohol

The use of illegal drugs is prohibited. The consumption of alcoholic beverages before the entire racing program has completed is prohibited. Racetrack management may also have rules that further restrict alcoholic beverage consumption in pit areas. As guests of the racetrack, all NRSS participants will comply with racetrack rules.

Smoking

No driver, or anyone else, is allowed to smoke while sitting in the car.

Abusive Behavior and Unsportsmanlike Conduct

Sprint Car racing is an extremely emotional sport. The spirit of sportsmanship is the cornerstone of any competitive racing program, and professional conduct is expected of all participants. Professional conduct includes respect for all participants, drivers, owners, pit crews, partners, track personnel, and NRSS officials. The NRSS will always strive to be consistent when making decisions, no matter what or who is involved, and will treat all participants with respect. Similar conduct from participants is expected in return. Fighting, harassing, or verbally abusing any NRSS official, security personnel, safety worker, firefighter, tow truck operator, push truck operator, racetrack worker, or racetrack management will not be tolerated.

No participant shall engage in improper behavior on or off the track, while in or out of the race car. No participant shall subject any NRSS official, track official, track employee, partner, fan, or participant to abusive or improper language at any time. No driver shall get out of their race car to verbally assault or threaten any NRSS official, track official, track employee, partner, fan, or other participant.

No team may receive hand signals, or any other type of signal, from anybody in the stands or anywhere else. The penalty is disqualification for the night and a $1,000 fine.

A participant is considered at fault if in a competitor's pit area without an invitation, or in a tech area without having a car present for tech.

Examples of Unacceptable Behavior

- Attempting to, or physically abusing, any event official, including pushing, punching, touching, grabbing, and/or grabbing the official's equipment.
- Verbally abusing any event official.
- Pushing a race car off from the wrong area and/or not stopping in the designated area, causing undue confusion and/or delay.
- Failing to stop for, and/or allow, a post-race inspection.
- Attempting to drive roughly and/or bumping another competitor unnecessarily.
- Attempting to use unapproved fuel.
- Attempting to use, and/or using, tires found to be unapproved in any manner.
- Attempting to use, or using, an unapproved engine.
- Failing to quickly stop for a red flag or driving through the incident area.
- Going into another competitor's pit area, or to another competitor's car, and becoming involved in any type of altercation.
- Involvement in an altercation that results in physical contact.
- Driving a race car in an area closed to race car traffic, or driving through the pit area at excessive speed in a race car, scooter, or 4-wheeler.
- Entering the racing surface or infield without permission during a controlled period.
- Ignoring a flag or official signal.
- Violating any substance abuse rule at any event.
- Any behavior at or away from the track deemed detrimental to the NRSS.

Violation of Spirit and Intent of Rules & Unsportsmanlike Conduct

Any participant who defies or violates the intent or spirit of the NRSS rules is considered to have engaged in unsportsmanlike conduct and will be dealt with by the NRSS or track officials, depending on the nature of the infraction. Unsportsmanlike conduct is a non-appealable offense.

Reserved Participation Right

The NRSS and the track promoter reserve the right to refuse to accept the entry of any car or participant. Furthermore, the NRSS and the track promoter reserve the right to revoke or cancel any entry, or any participant's claimed right to be on the track premises, if it is determined that a participant's presence or conduct is not in the best interest of the sport of auto racing, the other competitors, the spectators, track management, event employees, or the NRSS.

Penalties

In an effort to encourage professional conduct at NRSS events, the following system of penalties applies:

- NRSS officials are empowered to immediately disqualify any competitor for the remainder of the event and impose a suspension of up to one year. NRSS officials are also empowered to impose a penalty of up

to $2,500.

- Disqualification includes the loss of all points and prize money. If a driver is disqualified, that driver cannot use that night as a throw-out toward the total season points.

Finality of Decisions and Interpretations, and a Covenant Not to Sue

The decisions of NRSS officials, or track officials, at an NRSS-sanctioned event are final, binding, and cannot be appealed. This includes the interpretation of the rules, the application of the rules, and the scoring of positions.

All participants, as a condition of participating in an NRSS-sanctioned racing event, agree that all decisions of NRSS race officials, or track officials, regarding the interpretation and application of the NRSS rules and the scoring of positions will not be litigated. All participants further agree that they will not initiate any type of legal action against the NRSS, or an NRSS promoter, to challenge such decisions, to seek monetary damages, to seek injunctive relief, or to seek any other kind of legal remedy. If a participant pursues any such legal action in violation of this provision, the participant expressly agrees to reimburse the NRSS, or the NRSS promoter, for all attorney's fees and costs incurred in defending against such legal action.

Off-Track Actions

Sportsmanship does not pertain only to activities at the track. As a competitor with the NRSS, drivers, team members, and family members are expected to act professionally at all times. The same sportsmanship expected while competing at race facilities, as documented in the NRSS Rule Book, applies to the publication of public media content, social media content, and online activities. When creating and publishing public content, social media content, or online content, the content must be in accordance with the spirit of sportsmanship expected of all NRSS competitors, or it will be considered an act of unsportsmanlike conduct. Any conduct, including the publication of public content, social media content, or online content, that adversely affects the NRSS, NRSS officials, partners, or other competitors may result in disciplinary action, up to and including suspension and fine. This guidance also pertains to NRSS officials and NRSS competitors and families.

Car & Driver Safety Requirements

On-Track Incident

If you are involved in an on-track incident, **DO NOT EXIT YOUR SPRINT CAR UNLESS IT IS ON FIRE OR YOU ARE INSTRUCTED TO DO SO BY AN OFFICIAL.** Any driver who exits their car after it has been pushed onto the race surface for reasons other than those above will not be allowed to continue in that race and will be scored in the appropriate position for points and pay.

Mandatory Equipment

If a driver is found without any mandatory safety gear while putting heat in the engine, the penalty is starting in the back all night. In the pre-race lineup, they will not be allowed on the track. If they are found without mandatory safety gear in post-race tech, they will be disqualified for that event.

- **Fuel bladder.** A fuel cell with a bladder is the only type of fuel cell permitted. Acceptable fuel cells are SFI 28.1 certified. Industry-standard fuel cells constructed with semi-rigid, cross-link polymer material are also allowed. The fuel cell must be securely mounted to the chassis at the rear of the car.
- **Full containment racing seat.**

- **Quick-release steering wheel.**
- **Racing-approved 5-point seat belt restraints** that are no more than three years old, or per the manufacturer's recommendation. Reviewing and adhering to the guidelines in the following links is strongly recommended. Seat belts must be properly installed.
  - https://www.simpsonraceproducts.com/support/installation_guides/ (under Harnesses, refer to the manuals on mounting brackets, seating positions, and web installation)
  - Butler Built: PROPER_Seat_and_Seat_Belt_Mounting_SPRINT.pdf (butlerbuilt.net)
- A **full-coverage racing helmet** (Snell rated SA2015, SA2020, or SA2025) is required.
- A minimum **2-layer approved fire suit, shoes, stocking, helmet skirt or head sock, and Nomex gloves** meeting acceptable industry standards are required.
- **Arm restraints.**
- **Raceceiver radio.**
- **Rock screen.**
- **Transponder.**
- There must be a minimum of **2 inches of clearance** between the top of the driver's helmet and the top of the Sprint Car frame, with the driver sitting upright and squarely in the car. If 2 inches of clearance does not exist, a Sprint Car halo with 2 inches of clearance between the top of the driver's helmet and the bottom of the halo bar must be properly installed in accordance with industry standards. Four inches of clearance is strongly recommended. Any racing seat with more than one-half inch of padding will require additional clearance.
- A **fire extinguisher**, suitable for use with methanol and oil fires, must be charged, staged, and readily accessible on all race trailers, 4-wheelers, and push vehicles.
- **Side safety bars.** We highly recommend that you contact your chassis manufacturer for proper installation of one of the following options:

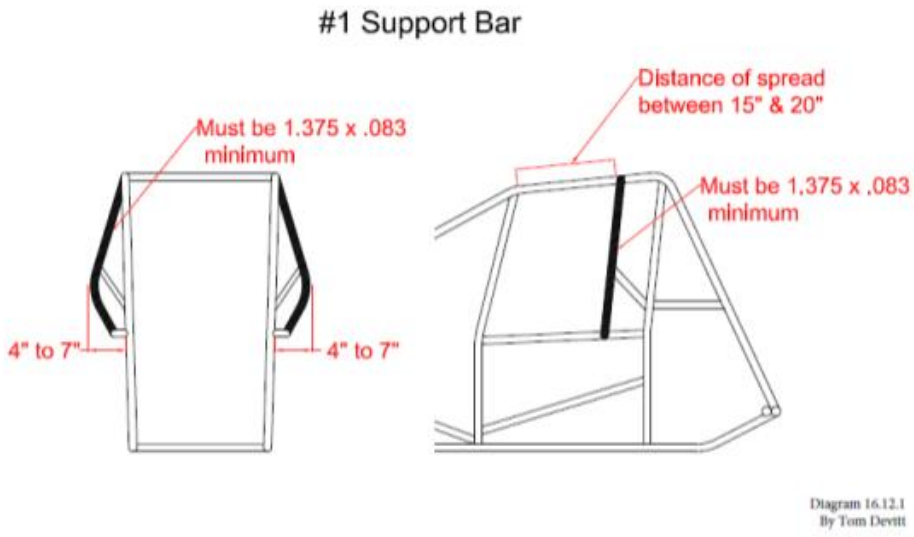

#1 Support Bar — Diagram 16.12.1, by Tom Devitt

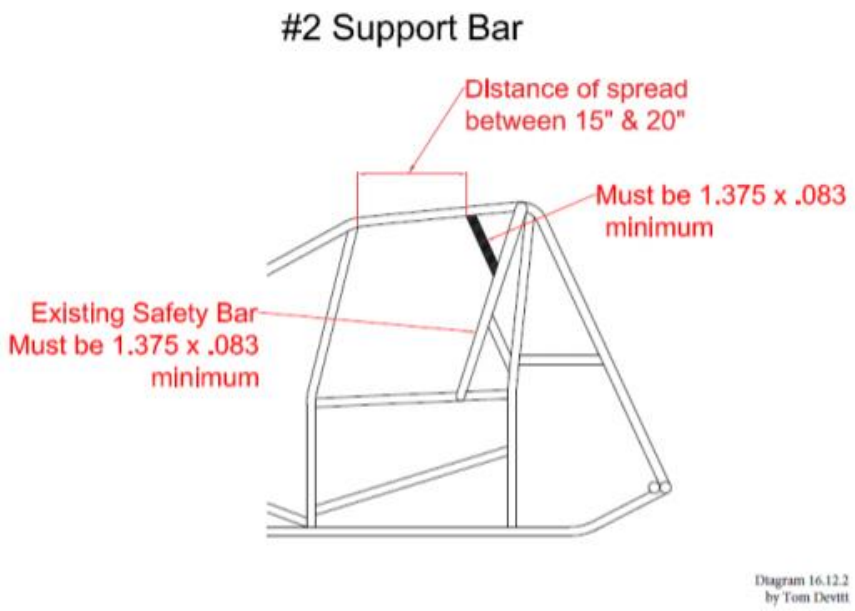

#2 Support Bar — Diagram 16.12.2, by Tom Devitt

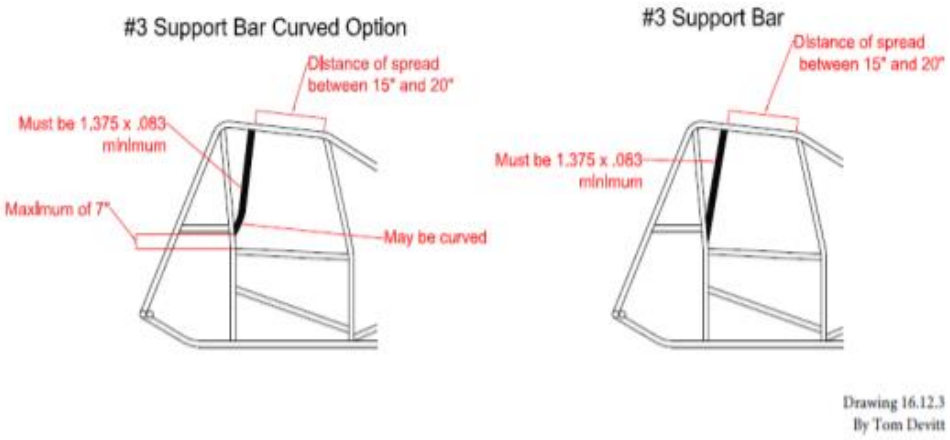

#3 Support Bar (Curved Option and Standard) — Drawing 16.12.3, by Tom Devitt

Strongly Recommended Equipment

- High-impact roll bar padding.
- Knee protection.
- Fire-resistant “Impact Dissipating Race Seat Padding,” “Crash Pad,” or a “Visco-Elastic Polymer Padding” product for race seats that is designed to distribute impact forces. Impact-dissipating seat padding should not cover the entire seat and should not have a thickness that exceeds 1/2 of an inch.
- Head and neck restraint.
- Fire-resistant Nomex underwear.
- On-board fire suppressant system.
- Fuel shut-off valve.

It is strongly recommended that seat belts be replaced every season.

It is strongly recommended that the driver be able to enter and exit the left side of the car.

All safety and fire safety gear should be in good condition and serviced annually or as needed.

Unsafe Cars

Any car considered unsafe by NRSS or track officials will not be allowed to participate.

4-Wheelers

In Pits: All 4-wheelers, gators, etc. should either be in your pit stall or behind your car at all times. No running around the pits.

All 4-wheelers, gators, and vehicles used to push a Sprint Car must have a pusher plate constructed in such a way as to prevent the 4-wheeler, gator, or push vehicle from getting hooked on, over, or under a Sprint Car rear bumper. All 4-wheelers, gators, and push vehicles are required to have a charged and readily accessible fire extinguisher suitable for methanol and oil fires. All push vehicles should be large enough (engine size in cc) and mechanically maintained in order to enter the track. If a push vehicle is not capable of starting a Sprint Car, make arrangements with NRSS officials.

During Races: All teams that have 4-wheelers, gators, or push vehicles may be asked to push off their own Sprint Car prior to the start of each race and after red flag periods. After a red flag, if teams are pushing off their own car, the team's push vehicles will not be allowed on the track until instructed to do so. No 4-wheelers, gators, or push vehicles will be allowed on the race surface or in the infield at any other time. The location of a designated area for 4-wheelers, gators, and push vehicles to park during the race will be announced at the drivers' meeting. **Note:** No 4-wheelers, gators, or push vehicles will be allowed behind a Sprint Car until a red flag situation changes to yellow and the push-off process begins.

Some tracks may have special procedures for 4-wheelers, gators, and push vehicles. This information will be communicated at the drivers' meeting. It is the driver's responsibility to pay attention and ensure team members comply with the rules.

Order of Events

Engine Heat / Packing

Drivers are required to wear full safety gear when putting heat in their engines. Failure to do so will result in starting last in each race for the event.

All drivers must participate in track packing when requested. Failure to pack the track when requested will result in those teams not participating in their heat race and starting at the back of the feature.

Hot Lap / Qualifying

All events will utilize Hot Lap/Qualifying procedures unless special circumstances occur. All drivers will receive 1 lap to warm up followed by a Green, White, Checkered of timed laps. Hot Lap Qualifying will take place in groups; groups will be determined by pill draw.

- The inversion following qualifying will be 6: the 6th place qualifier in the group will start 1st in the heat race, the 5th place qualifier in the group will start 2nd, and so on, with the fastest qualifier starting 6th. Qualifiers seventh and beyond line up in qualifying order behind the inverted six.

Drivers are not allowed to hot lap while push trucks, officials, or safety crews are on the race surface. When a driver is pushed off for hot laps, the driver must wait until the race surface is clear and the light goes green before hot lapping.

Do not try to hot lap under a yellow condition. Hot lapping under anything other than a green light is a critical safety issue. A driver can be black-flagged and penalized for hot lapping under a yellow condition. When a track is yellow, officials may be on the race surface, in push trucks, or in safety vehicles on the race surface.

There is absolutely no reason for a driver to endanger the lives or well-being of officials or track workers who are there to help the competitors.

Qualifying & Passing Points

Feature and B-Main lineups are set by total points. A driver's total points are the sum of qualifying points, heat race finish points, and passing points, plus any fastest-time bonus.

Position	Qualifying Points	Heat Finish Points
1	50	40
2	49	38
3	48	36
4	47	34
5	46	32
6	45	30
7	44	28
8	43	26
9	42	24
10	41	22

- Qualifying points are awarded by qualifying position within the driver's group. Positions beyond 10th earn one point less per position (11th = 40, 12th = 39, and so on).
- Heat finish points are awarded by finishing position in the heat race. Positions beyond 10th earn two points less per position (11th = 20, 12th = 18, and so on).
- Fastest time: the fastest qualifier in each group earns 2 bonus points.
- Passing points: a driver earns 3.33 points for each position gained from their heat race starting position to their finishing position, and loses 1.26 points for each position lost.

Heat Races

- Heat races will be held at most events.
- Each heat race will have a maximum of 9 cars.
- The car count at the close of the drawing for heat races will determine the number of races to be run (9 or fewer cars = 1 race, 10–18 cars = 2 races, 19–27 cars = 3 races, 28–36 cars = 4 races, 37–45 cars = 5 races, 46–54 cars = 6 races).
- Heat races will be a minimum of 8 laps.
- In the event of special circumstances, qualifying may be skipped and a pill draw will be used to set the heat race lineups. Any driver that does not qualify will be placed at the tail of their respective heat race.

Rookies will start at the back of the field for a minimum of three events.

B-Mains

- One or more B-Main races may be held at events with total car counts of 21 or more, unless the promoter chooses to start all cars.
- Each B-Main race will have a maximum of 20 cars.
- The total car count for the event will determine the number of B-Main races to be held. A single B-Main race may be held if fewer than 20 drivers do not qualify for the feature race. Two B-Main races may be held if more than 20 drivers fail to qualify for the feature race.
- B-Main races will be a minimum of 10 laps.
- B-Main lineups will be set by total points (see Qualifying & Passing Points), with the highest point earner starting 1st.
- For events with one B-Main race, the top four drivers transfer to the back of the feature race. For events with two B-Main races and five heat races, the top five drivers from each B-Main race transfer to the feature race. For events with two B-Main races and six heat races, the top four drivers from each B-Main race transfer to the feature race. All rookies required to start at the back of a field will start at the back of the field if they successfully transfer into the feature race.

A-Feature

- The feature race will be the final race at each event.
- Each feature race will have a maximum of 24 cars. The promoter may choose to add additional cars if track conditions are such that additional cars can be safely accommodated.
- Each feature race will be a minimum of 20 laps.
- The feature race lineup will be set by total points earned in qualifying and the heat races, using the Qualifying & Passing Points system above. The highest point earner starts 1st, the next highest starts 2nd, and so on. Drivers who do not earn a feature starting position will line up in the B-Main by total points.
- Ties in total points will be broken by the fastest qualifying time.

The NRSS reserves the right to change the format of events, at will, and with no prior notice. The goal is to announce all changes to the format at the drivers' meeting.

Time Limits

Each race will have a time limit of one minute per car (for example, a race with 25 cars must be completed within 25 minutes). This rule will be enforced within reason.

Push-Off Lane

All cars must be in the designated push-off lane, or en route to the push-off lane, when the first car is pushed off to start any event. Cars not in, or en route to, the push-off lane will start the race at the back of the field. Push starts are allowed in designated areas only!

One Push-Off Per Race

Drivers are allowed only one push-off prior to the start or restart of any race. If a driver requires a second push-off, the driver will go to the back of the field. This rule does not apply if a second push-off is necessary due to safety concerns (within reason) on the part of track or NRSS officials.

Event Rules

Changes in Race Lineups — Start/Restart Lineup Corrections

Changes in lineups will be handled in the following manner:

- Heat race lineups are set once qualifying is complete.
- Prior to the initial green flag and one lap being completed:
    - Lineup: Rows behind the vacated position will move up to fill the position.

If a driver elects to start at the tail of the field, that driver should report their choice to an NRSS official prior to the start of the race so a proper lineup can be determined ahead of time.

Alternates will be allowed only for the feature race. If a driver fails to start the feature race, the rows behind that driver will fill the vacancy, and the alternate starts on the last row, either inside or outside, depending on where the scratched driver was to start. Once the initial green flag is waved, even if a lap is not completed, the field will be deemed complete and no alternate will be added to replace damaged cars.

When the field gets the one-lap-to-go flag and passes the flag stand, the driver in the pole position will set the pace for the start of the race. No throttle-pumping, pulling out of line, or brake-checking will be allowed after this point. The leaders will bring the field to a designated spot (cone and white line) exiting the fourth turn on the track at a moderate pace. The field will maintain a side-by-side, nose-to-tail posture. The driver in the pole position sets the pace and starts the race at the designated point. If the pole car is not maintaining an appropriate pace, the driver will be notified on the Raceceiver radio. Failure to pick up or maintain a proper pace can result in a penalty if NRSS officials deem the pace unsafe and warnings to maintain a proper pace are ignored. If a driver pulls out of line before a start, the yellow will be called and that driver will be penalized two spots.

Side-By-Side Starts

In an effort to give NRSS race fans the best show possible, and to give each NRSS driver the opportunity to compete on a level playing field, the following race start and restart procedures will be enforced.

- Initial race starts and restarts will be done in rows of two.
- The pole car (inside row 1) sets the pace. The pace should be consistently maintained down the back straight and through turns 3 and 4, until the green flag and/or green light is displayed.
- The pole car shall allow sufficient room for the outside row alongside the pole car. A consistent line through turns 3 and 4 shall be maintained by the pole car on the bottom half of the track so as to allow plenty of room for the outside row of cars in order to facilitate a safe start.
- If a driver in the pole position fails to leave sufficient room for the outside row, and/or does not hold a consistent line through turns 3 and 4, the driver will be penalized for jumping the start.
- The outside row must maintain a side-by-side position with the inside row until the race starts.
- Rows 2 through the end of the field should follow the front-row cars nose-to-tail.

- The driver in the outside front row position shall not go across the start line prior to the pole car and will be no farther back than half a car length from the pole car.
- The start line is defined by the white line across the track in turn 4 with a cone on the inside of the line.
- The driver in the pole position is allowed to fire and start the race at any time within 10 feet before the line. The race starts when the driver in the pole position fires, or when the pole driver's front tires cross the white line.

Jumping Starts and Restarts

The initial start will be green-flagged at the line and/or cone in the fourth turn. On the race's initial start, if the drivers on the front row cannot work together and get an even start, one or both offenders will be penalized. If a driver further back gets out of line (not side-by-side and/or nose-to-tail) as the front row accelerates, it will be considered a jump. If there is a jump, the yellow will be thrown and the penalized driver will receive a two-position penalty.

During a restart, the lead driver must start at the fourth-turn cone or chalk line. Starting more than 10 feet before the cone or chalk line in the fourth corner will result in a two-position penalty. Again, the yellow will be thrown and a two-position penalty will be assessed from the restart position. Drivers must stay in formation and CANNOT pass the car directly in front of them until they pass the start cone or chalk line. Failure to do so will result in a two-position penalty.

Scoring

The entire field normally has to complete a lap before a restart occurs. All starts and restarts are double file. When a yellow or red flag is waved, scoring terminates and the restart lineup will be based on the last lap the entire field completed. Cars involved in an incident will be put to the rear of the field. The NRSS uses Raceceiver radios, and drivers are expected to use them for directions regarding positioning from the tower. A penalty may be issued for failure to respond to Raceceiver communications. Any car lapped by the lead car will be considered a lap down until they pass the leader back on that green-flag run, or the caution/red flag comes out. On restarts, all lapped cars are considered to get their lap back and may resume racing.

Double File Restarts

When the yellow flag is waved, drivers are to line up behind the car directly to their front, whether it is lapped or not. All restarts are double file: the leader starts on the inside of the front row, second place starts on the outside of the front row, third place starts on the inside of the second row, fourth place starts on the outside of the second row, and so on until the field is lined up.

360 Spin Rule

NRSS frowns upon 360 spins, particularly in traffic. If an NRSS official believes the situation to be unsafe or a hindrance to other cars, a yellow will be called and the car doing the 360 spin will be put to the rear. The 360 car can also be considered involved if its 360 caused an incident that forced a yellow. If the NRSS official does not believe the spin to be either unsafe or a hindrance to others, no yellow will be called.

Two Yellow (Spin) Rule

Any driver who causes two yellows in any race “unassisted” will be black-flagged from the race. The driver will bring their car to the pit area and will not restart it. An “assisted” yellow is an incident in which more than one car needs to be restarted, or a single-car spin due to contact with another car. Any driver involved in more than three race-stopping incidents of any combination, assisted or unassisted, will be black-flagged.

No Repairs on Track

A driver or crew member may not work on a car while on the race surface. NRSS officials can and will inspect a race car for safety issues and will decide if a car should go to the designated work area (feature only) or the pits.

Flat Tires

If a driver experiences a left-front flat tire, the driver will be allowed to continue racing. Any driver experiencing a flat tire, other than the left-front tire, during a heat race will be black-flagged. A driver experiencing a flat tire, other than the left-front tire, during a B-Main or feature race can go to the designated work area and will be given two laps, once the lineup has been set, to change the tire.

Work Area

If a driver experiences a flat tire or mechanical failure on their race car during a feature race, the driver may go to the designated work area using the safest means possible. A yellow flag will come out, if it has not already, and the driver’s pit crew will be granted two laps, after the rest of the field is in their correct order and lined up for a restart, to get the driver’s car race ready. The designated work area is located off the race surface. Pit crew personnel are not allowed to work on a car until it is in the work area. If work begins before a car is in the work area, the driver will be disqualified. Under no circumstances is a driver allowed to dismount their race car in the designated work area unless directed by an NRSS or racetrack official. Furthermore, a driver’s race car must appear safe for restarting in the opinion of NRSS and track officials before a race car will be allowed to restart the race. If a driver’s pit crew cannot complete repairs in the time allotted, the driver will not be allowed to restart, will be removed from the designated work area, and will be scored in accordance with the number of laps completed. If a driver experiences a flat tire or mechanical failure on their race car in anything other than a feature race, the driver must leave the race surface using the safest means possible, and the driver will be scored in accordance with the number of laps completed. The designated work area may be closed at the NRSS official’s discretion at any time if a curfew, time, weather, or other factor threatens the timely completion of the feature race.

Incomplete Race

In an event where the feature race cannot be completed due to weather, time, or other factors, the payoff will be paid based on the finishing order of the last completed lap. If a race is stopped due to weather, time, or other factors and cannot be restarted, the race will be declared complete if the race has reached or exceeded the halfway mark. When a feature race is stopped, cannot be restarted, and has not reached the halfway mark, NRSS and track officials may declare the race complete if the feature race is close to the halfway mark and no rain date was scheduled.

If a feature race was not started or completed, due to weather, time, or other factors, and a rain date was not scheduled, the following procedures will be followed:

- If heat races were completed, the payoff will be distributed based on total points earned, from highest to lowest, unless the event can be rescheduled.
- If heat races are not completed, NRSS officials will work with the host racetrack management to determine equitable compensation or a refund of pit passes.

Driver Changes

No driver changes will be allowed after the start of the heat races. A driver may qualify and race only one car. A driver change can take place after hot laps and prior to the start of the heat races.

Late Arriving Entrants

If a driver misses the heat race for any reason, the driver will be allowed to start the feature race at the back of the field. If there are enough drivers for a B-Main, all drivers not placing in a heat race will start at the back of the B-Main field.

Engine Changes

Engine changes are allowed after hot laps with no change in starting position in the heat race. If an engine change occurs after a heat race, that driver will start at the back of the field in the feature race. If there are enough drivers for a B-Main, all drivers who change engines after their heat race will start at the back of the field of the B-Main.

Backup Cars

Backup cars bearing the same number can be brought out prior to the heat races. Only one car may be used for multi-day events that qualify a car on the first night to subsequent nights. In other words, if a second car is used on the second night of a multi-day event, the qualifying spot for the original car is disqualified and the qualifying spot for the second car must be used. This rule applies to multi-day shows whether held at the same track or multiple venues.

Scale

Immediately after each race, and before going to the race car trailer staging area, the top three to five finishers in the heats and feature races must go to the scale. If a driver fails to scale, the driver will be disqualified and will not receive any payout or points for that race. Any change to this procedure will be announced at the drivers' meeting. If in doubt, go to the scale. In addition, no crew member will be allowed to work on (touch) the car before scaling and going to tech. This includes the winning car in Victory Lane.

Tech

Immediately following the finish of an A-Main feature race, the top three to five finishers must move their race cars to the designated tech area immediately after scaling their car. A failure to report to tech, stopping at the race car trailer staging area before reporting to tech, or attempting to alter the race car in any way will result in immediate disqualification. Any car that fails a technical inspection will be disqualified and will receive no money or points for the night. In addition, any team that refuses tech or ends tech before it is completed will be disqualified. Doing this twice will result in disqualification for the night, a four-race penalty, and a $300 fine. Subsequent refusals will result in a one-year penalty and up to a $2,500 fine. NRSS Technical Officials will have complete control of all tech inspection activities. Decisions of NRSS officials are final. No more than one crew member and one driver are allowed in the designated tech area until all tech inspections have been completed. Any driver having more than one representative from their team in the tech area before tech has been completed will be immediately disqualified. A head count will be performed before the technical inspection begins.

Engine Protest Rule

Application

The engine protest rule is applicable to all drivers at all NRSS events.

Race Cars Subject to Being Protested

All race cars competing in an NRSS feature event.

Drivers Eligible to Protest

All NRSS licensed drivers competing in an NRSS feature event are eligible to protest any race car engine used to compete in an NRSS event. All protests must be executed with an NRSS Technical Official prior to the start of the feature race. A protest fee of $1,000.00 (in U.S. cash currency only) must be tendered to execute a protest.

Disposition of Protest Fee

If, after teardown, the protested engine is found to be legal, $250.00 of the protest fee will be paid to the protested driver, and $750.00 will be paid to the NRSS Technical Official. If the protested engine is found to be illegal, $250.00 of the protest fee will be returned to the protesting driver, and $750.00 will be paid to the NRSS Technical Official.

Protest Procedure

After the feature race, an NRSS Technical Official will notify the driver that their race car engine is subject to a protest. The protested driver will schedule a teardown procedure with the NRSS Technical Official. The teardown procedure may take place at the track, or another suitable location, within a reasonable period of time.

Special Provisions Related to Protests

- A licensed NRSS driver is the only participant who may protest.
- A driver may protest only one engine per race.
- The NRSS Technical Official has the final word on the legality of the engine involved in a protest.

- No person shall prevent or interfere with the protest procedure.

Withdrawal of Protest

If a driver declares an intent to protest and tenders the required protest fee, the protest procedure must be executed. If a driver attempts to rescind or cancel a protest, the driver will lose the protest fee, will forfeit all money and awards for the event, and will lose all points earned to date.

Refusal of Protest

A driver who refuses to allow a teardown procedure pursuant to a protest will be subject to a one-year suspension, a $2,500 fine, and must repay all winnings earned in the current season.

No engine can be protested more than once per season. The NRSS may perform an engine teardown procedure at any time.

Flags

Green

The race has started. Go. This applies even if the first lap is not completed.

Black

Leave the track as safely as you can, without causing a yellow. A black flag usually means something is wrong with your car and it is unsafe to keep racing. Ignoring a black flag means automatic disqualification.

Yellow

Slow down, do not pass, and line up behind the car ahead of you to await the restart lineup. Scoring stops under yellow. There is no racing back to the start/finish line.

Note: Any driver who stops during a yellow flag will restart at the rear of the field, even if not involved in an incident. If a car loses a mechanical part that causes a yellow, the driver may restart at the rear, but only if the lost part is not a safety issue and breaks no other rule. If debris from one car hooks onto another car, the yellow will come out. The driver will be stopped so the debris can be removed and will get their spot back, while the driver of the car that lost the part will restart at the rear. If a car is damaged in an incident, or the driver stops on the track because of a mechanical failure, the track will go yellow. In a heat race, if the car cannot continue, it will be removed from the race surface. In a feature race, the driver may go to the designated work area, where the pit crew will have two laps, once the cars on the track are in their correct starting order, to make repairs. After repairs, the driver may rejoin at the rear of the field. If repairs cannot be finished in the time allowed, the driver may not rejoin. Work areas are off the race surface. Crews may not work on a car until it is in the work area. Starting work early means disqualification.

Red

The race is stopped. Slow down and stop as quickly and safely as you can. Do not drive through a red flag crash scene; doing so will bring a penalty. If contact stops your car, you are considered involved. Spinning to avoid a red flag is also being involved. All drivers involved in a red flag incident will restart at the back of the field.

During a red flag, stop on the upper half of the track so the bottom lane stays clear for emergency vehicles and so cars can be pushed off when the track goes back to yellow.

All red flags are closed unless officials say otherwise. No working on a car during a red flag. If officials open the red flag, drivers will be told by Raceceiver radio what crews are allowed to do (for example, fuel and tear-offs only).

Blue (with yellow stripe)

Hold a steady, predictable line. Faster cars are coming up behind you.

White

One lap to go. If a yellow or red flag comes out on the last lap, the finish will be a green-white-checkered finish.

Checkered

The race is over.

Yellow/Checkered (both)

An incident happened on the track after the checkered flag was shown to the leader. Drivers who crossed the line before the yellow will be scored as finished. The rest of the field will be scored from the previous lap. Drivers involved in the incident will be scored at the rear of the field on the last scored lap. Weather, time, track conditions, or other factors can also cause a yellow/checkered.

Red/Checkered (both)

Same as yellow/checkered, but the incident is more severe. Stop right away and follow the normal closed red flag procedures. The race is over if a red/checkered flag comes out.

Reminders

Keep in mind that NRSS events are run with the help of track officials who may not be 100% familiar with NRSS event rules. Although every effort to prevent it will be made, mistakes are going to happen. Competitors are asked to show grace and acceptance in these instances.

PART II — TRADITIONAL SPRINT SPECIFICATIONS

Engine Specifications

There are three engines that are legal in this series. All engines are subject to pumping, whistling, and/or teardown by officials at any time.

In 2025, adjustments were made to the Chrysler/Mopar engine rules. This will create more parity with this engine package, and it will continue to be closely monitored.

Teams using the Chrysler engine will be allowed the Magnum heads and Edlebrock Victor 2915 or 7545 intake.

Please keep in mind that the NRSS will correct any items deemed to be costing racers too much money after the 2027 season. As much notice as possible will be given for these corrections, but every effort will be made to keep this class affordable and fun.

360 Engine

1. Block

- Any Chevrolet 305, 307, 327, or 350 CI stock iron block that was available in a passenger car or truck. Maximum overbore — .060”.
- Any Ford 302 or 351 Windsor stock iron block that was available in a passenger car or truck. Maximum overbore — .060”. No Cleveland, M, or Clevor engines allowed.
- Any Chrysler 318, 340, or 360 CI stock iron block that was available in a passenger car or truck. Maximum overbore — 318 and 360: .040”; 340: .060”.
- No interchange of crankshafts or rods to blocks is allowed.
- Absolutely no lightening of any kind is allowed. All mounts must remain, including the fuel pump, motor mounts, etc.
- Factory 2- or 4-bolt main blocks ONLY (a 2-bolt block cannot be altered to a 4-bolt block). No splayed caps.

2. Crankshaft

- Any stock GM production crankshaft is allowed.
- The following Scat 9000 Series crankshafts are allowed:
  - Chevrolet 350 — Scat (Part # 9-10442)
  - Ford 351 — Scat (Part # 9-351-3500-5955-2311)
  - Chrysler 340, 360 — Scat (Part #s 9-340-3580-6123, 9-360-3580-6123)
- The following Eagle OEM replacement crankshafts are allowed:
  - 103503480
  - 103503480CM
  - 103523480
- The crankshaft stroke must match the block.

- No lightening, counterweight knife edging, or counterweight polishing is allowed. Balancing is allowed.
- The crankshaft flange may be machined to fit the rear motor plate and torque ball housing.
- Any crankshaft or connecting rod with a part number superseded by the manufacturer is legal, as long as the crankshaft or connecting rod with the superseded part number has the same specifications as the legal crankshaft or connecting rod.

3. Connecting Rods

- Any stock steel production connecting rod, Scat OEM replacement I-Beam (must say Scat 5.7), Eagle OEM I-Beam PN SIR5700BBLW, or Eagle OEM I-Beam PN SIR5700BPLW is allowed.
- Chevrolet 5.7” length powdered metal connecting rods are allowed.
- The connecting rod length must match the block.
- No grinding or polishing is allowed. Connecting rod balance pads may be machined to balance rotating and reciprocating mass. One big-end and one small-end balance pad must remain stock.
- No cap screws are allowed except on the designated Eagle OEM rod. Maximum 3/8” bolts.

4. Pistons

- Any forged, cast, or hypereutectic aluminum piston is allowed.
- Engines must not exceed a 9.50:10 compression ratio. No exceptions!

5. Camshaft

- Camshafts and lifters must be hydraulic.
- Lifters must collapse a minimum of .100”.
- Only lifters of the engine make can be used.
- Lifters must rotate freely and be of magnetic material.
- The camshaft must be driven by a timing chain. No belt or gear drives are allowed.
- The camshaft may be drilled for a rear spud.
- No lightening, grinding, or polishing is allowed.

6. Cylinder Heads

- The cylinder head must be a stock cast iron production head. The only aftermarket heads allowed are Engine Quest (EQ) part #CH350I.
- Chevrolet 1987–1995 Swirl Port heads are allowed.
- Ford 302 GTP heads are allowed for both the 302 and 351W.
- No Vortex, Bowtie, SVO, W-2, Magnum, Gen II, or angle plug heads are allowed.
- The following Chevrolet casting numbers are not allowed: 040, 041, 186, 187, 291, 370, 414, 432, 461, 461X, 462, 492, 10125320, 10208890, 10239906, 12554290, 14011083, or 14096217.
- Porting or polishing of any kind is not allowed.
- Angle-milled cylinder heads are not allowed.
- Carbide cutter relief cuts are allowed below the valve seat but must not exceed more than ¼ inch below the top of the valve seat. A small deviation in this specification is allowed due to manufacturing variations

in the area below the valve seat.

- Valve springs must be the same diameter as a stock production spring. Tapered or Beehive valve springs are not allowed.
- Steel stock-type stamped rocker arms only. Roller or roller-tipped rocker arms are not allowed.
- Stud girdles are not allowed.

7. Intake Manifolds

- The following intake manifolds are the only intakes allowed.
  - Chevrolet — Weiand (Part # 7546, 7467, or 7547-1 X-CELerator).
  - Ford — Weiand (Part # 7515, 8023), Professional Products (Part # 54033).
  - Chrysler — Weiand (Part # 7545).
- Porting, polishing, or gasket matching of any kind on an intake manifold is not allowed.

8. Oiling System

- Wet sump only. The oil pump must be in the oil pan.
- A 3/4-inch inspection hole (1 inch highly recommended) must be installed in the side of the oil pan 2½ inches down from the pan rail and in line with a journal. Removal of the oil pan may be required if further inspection is necessary.

9. Ignition, Starter & Electronics

- All battery-powered ignitions and magnetos are allowed, except where noted. A magneto is highly recommended. External coils are allowed.
- No MSD-type magnetos are allowed.
- Aftermarket crank triggers are not allowed.
- Cars must have a clearly marked ON/OFF switch within reach of the driver and visible to officials.
- Only one battery is allowed. The battery must be securely hard-mounted and shielded.
- An on-board starter is allowed.
- No electronic monitoring devices capable of storing or transmitting information are allowed, except for a memory tachometer.
- No electronic traction control devices are allowed.
- All engines are required to use a stock firing order.

10. Exhaust

- Any Sprint Car type header is allowed, except where noted.
- One collector per side. Slip or merge type headers are not allowed. Mufflers are optional.
- Race cars may be required to have a muffler if local track rules require mufflers.
- Schoenfeld part number 112535, 112530, or Knoxville 14272735-78 are mandatory for all tracks that require the use of a muffler.
- No Tri-Y headers.

11. Water Pump & Radiator

- Any stock-type water pump is allowed.
- The radiator must be mounted in front of the engine.

12. Carburetor

- Must use a stock 4412 carburetor body only.
- Holley aluminum 4412 carburetor allowed.
- Casting number L6R1998; main body number R4412-14 or R4412-15.
- Cannot remove the air horn.
- Must meet all 4412-500cfm tech tool measurements.
- Adjustable/changeable air bleeds allowed.
- Aftermarket metering blocks allowed.
- Carburetor must be mounted with the float bowl facing forward.
- Maximum 1 11/16” throttle bore.
- No milling or grinding of the throttle shaft is allowed.
- Must use Holley-style straight-leg or down-leg boosters.
- Holley HP and XP are not allowed.
- A minimum of 2 throttle return springs are required.
- The throttle pedal must have a toe strap.
- Any carb spacer is allowed.

13. Fuel

- Racing alcohol is the only fuel allowed. The use of gasoline is strictly forbidden.
- No nitro or nitrous oxide is allowed.
- No oxygenated fuel additives are allowed. Fuel is subject to inspection at any time.

14. Fuel Pump

- Mechanical, belt-driven, and cam-driven fuel pumps are allowed. A cam-driven fuel pump is highly recommended.
- Electric fuel pumps are not allowed.

5.3 Liter LS Engine

1. Block

- Factory production iron blocks are the only blocks allowed. Aluminum blocks are not allowed. Aftermarket and bow-tie blocks are not allowed.
- Only industry-standard reconditioning of the factory production iron block is allowed.
- Boring, honing, line honing, deck resurfacing, and lifter bore repair are allowed.
- The cylinder bores may be resized a maximum of .060” over stock.

- Absolutely no lightening of any kind. All mounts must remain. Grinding or defacing of any factory numbers or markings of any kind is not allowed and will result in disqualification.
- Oversized and roller cam bearings are not allowed.

2. Crankshaft

- A stock OEM Chevy crankshaft with a stroke length of 3.622” is the only crankshaft allowed.
- No lightening, counterweight knife edging, or counterweight polishing is allowed. Balancing is allowed.
- The crankshaft flange may be machined to fit the rear motor plate and torque ball housing.
- 24- and 58-tooth reluctor wheels are allowed. Ensure the MSD box is the correct one for the reluctor wheel before ordering.

3. Connecting Rods

- Chevrolet OEM powdered metal connecting rods with a 6.098” center-to-center length are the only connecting rods allowed.
- Connecting rod bolts may be replaced. Small ends may be bushed and fitted for floating pins. Big ends may be resized to factory specs.
- No deburring or polishing is allowed. Connecting rod balance pads may be machined to balance rotating and reciprocating mass. One big-end and one small-end balance pad must remain stock.

4. Pistons

Same as 360 Engine, Section 4 (Pistons), above.

5. Cam/Lifters

- Only stock GM part number lifters are allowed as replacements.
- Stock or stock-style replacement rocker arms only. Roller-tip rockers are not allowed.
- Rocker arm trunnions may be upgraded to allow more lift if needed. No other rocker arm modifications are allowed.
- The push rods must be stock or 5/16” stock replacement style push rods.
- The maximum allowable lift at the valve is .600”.
- The camshaft may be drilled for a rear spud.
- No lightening, grinding, or polishing is allowed.

6. Cylinder Heads

- Factory aluminum cylinder heads only. The casting number must end in 862 or 706. All other cylinder heads are illegal and will result in disqualification.
- Only industry-standard head reconditioning is allowed. Valves may be replaced, but the replacement valves must have a stock stem diameter, stock length, and a stock head diameter (1.89” intake, 1.55” exhaust). Seats and guides may be replaced.
- Carbide cutter relief cuts are allowed below the valve seat but must not exceed more than ¼ inch below the top of the valve seat. A small deviation in this specification is allowed due to manufacturing variations in the area below the valve seat.
- Angle milling of the head, intake, or exhaust surfaces is not allowed.

- No porting, grinding, or polishing of any kind is allowed.
- A stock-style single Beehive valve spring is the only valve spring allowed.

7. Intake Manifolds

- All 5.3 LS engines must use the Edlebrock Victor Jr. part number 29087 intake or Holley 300-132 single plane.
- No modifications to the intake manifold are allowed.
- No porting, polishing, or grinding of any kind is allowed.

8. Oiling System

Same as 360 Engine, Section 8 (Oiling System), above.

9. Ignition, Starter & Electronics

- The MSD #6010, MSD #6014, MSD #6014CT, and MSD #60143 ignition controllers are the ONLY controllers allowed.
- Stock or stock replacement coil packs are allowed.
- No performance coil packs are allowed (i.e., Accel, MSD, etc.).
- At this time, no rev limit restrictions will be imposed, but the NRSS reserves the right to change this in order to ensure engine parity.
- Cars must have a clearly marked ON/OFF switch within reach of the driver and visible to officials.
- Only one battery is allowed. The battery must be securely hard-mounted and shielded.
- An on-board starter is allowed.
- No electronic traction control devices are allowed.
- The firing order must remain stock.

10. Exhaust

Same as 360 Engine, Section 10 (Exhaust), above.

11. Water Pump & Radiator

- Any stock-type (LS or small block) water pump is allowed.
- The radiator must be mounted in front of the engine.

12. Carburetor

Same as 360 Engine, Section 12 (Carburetor), above.

13. Fuel

Same as 360 Engine, Section 13 (Fuel), above.

14. Fuel Pump

Same as 360 Engine, Section 14 (Fuel Pump), above.

GM 602 Sealed Engine

A sealed GM 602 engine is legal. See the NRSS Technical Director for guidance on competing with the GM 602. The engine must have factory GM seals, and all other rules must be followed.

Engines will be randomly inspected for legality during the season. If an engine is inspected at the track, it will be done at no cost to the driver. If a driver prefers to have their engine inspected at a shop of the driver's choosing, a tech fee of $100 per hour, portal to portal, will be imposed. If a sealed engine is found to be nonconforming, the driver will be disqualified for one year, fined $2,500, and must return all prize money earned during the current season.

Contact the NRSS Technical Director if you have any questions.

Dyno Rule

At the discretion of NRSS Technical Officials, any team may be required to dyno their engine at Perfect Performance. The dyno session will be at the team's expense if found illegal and must be completed within two weeks of the request. The engine will be sealed until that time. This will be done in lieu of tearing down the engine initially to determine legality. Teardown may follow depending on the results.

Car Construction & Chassis Specifications (both Traditional and Wing)

1. Chassis

- Open to any Sprint Car chassis, 1994 to present.
- 4130 chrome-moly, TIG-welded steel frame recommended (1½-inch diameter by .095 minimum tube thickness on the main frame and cage required).
- Wheelbase: Minimum — 84 inches. Maximum — 96 inches.
- No hollow or drilled bolts, fasteners, or Heim joints are allowed.

2. Body

- Conventional Sprint Car body only. Must be well maintained.
- Must have at least one number of contrasting colors on each side of the tail tank and on the front nosepiece. Minimum of 15" tall.
- The hood can be a multiple-piece design and must appear to be one continuous piece.
- Conventional side panels only.
- No aerodynamic devices or wings are allowed.
- Sun visors are limited to nine inches long and cannot be wider than the cage.
- A solid metal firewall is required between the engine and the driver. A fiberglass dash is allowed.
- A solid metal floor pan must extend from the firewall to the front of the driver's seat.
- The body must have a traditional Sprint Car appearance (minimum window opening on the right side approximately 7" tall x 15" wide). An A-pillar (the bodywork connecting the front of the window opening) is NOT allowed.
- An energy-absorbing roof is allowed. If an energy-absorbing roof is on the car, it must conform to the EA Roof rules as follows:

- The energy-absorbing roof is required to be the Renegades-specified assembly (Part Number 5010015).
- The EA roof and side panels must be mounted according to the Renegades EA Roof mounting specifications and dimensional drawing (see below).
- Side panels must be attached to the chassis by at least three 7/16” diameter quarter-turn fasteners on each side and constructed of 0.040” minimum thickness aluminum. The energy-absorbing roof is required to be the Renegades-specified assembly (Part Number 5010015).

This piece of equipment is designed to mitigate the effects of a crash in a non-wing Sprint Car. Racing is an inherently dangerous sport, and drivers and teams assume all risk from the use of this product and racing in general. The Renegades racing brand and its series, along with host venues, are not liable for any personal injuries that may result from racing activities.

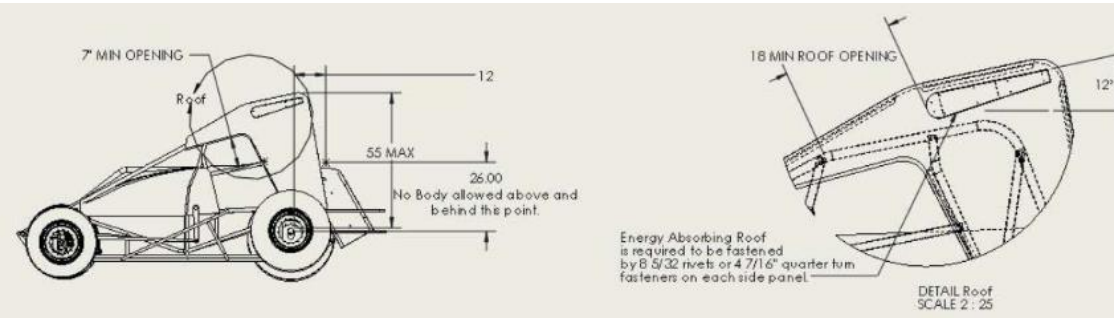

Energy Absorbing Roof mounting diagram (Part Number 5010015). The roof must be fastened by 3/8-16 x 1/2” or 7/16” quarter-turn fasteners on each side panel.

3. Suspension & Steering

- All shocks must be constructed of aluminum or steel. No cockpit-adjustable shocks or other suspension components are allowed. No remote or external canister-type shocks are allowed. One shock per wheel. Shocks may be rebound- or compression-adjustable on the shock only. No double-adjustable shocks are allowed. Gas shocks, single-adjustable, or nonadjustable shocks are allowed. Front shock protectors are allowed.
- Any conventional torsion bar or coil-over suspension is allowed. Combining the two is allowed. No anti-sway or zero-roll devices are allowed.
- Steel straight front axle only. 53” maximum width.
- Front axle tethers are required. Tethers must be purchased from a safety manufacturer and installed per their recommendations.
- A quick-release steering wheel is mandatory.
- The drag link must be tethered to the frame with nylon webbing of at least 1 inch in width.
- Drag links and tie rods must be made of 4130 or magnetic steel.
- Magnetic steel Heim joints (tie rod ends) are required on drag links, rear torsion arms, and tie rods.
- This does not affect the radius rods or Panhard bar; those may be run as aluminum if desired.
- **NOTE:** After the rules freeze is over (2027), shock rules will be adjusted to limit expense.

4. Driveline

- Quick-change center sections are required.

- All drivelines must be broken in the coupler or rear slider.
- The driveline must be fully enclosed and contain no more than one U-joint or CV joint, and that joint must be at the front of the driveline. No torque-arm drivelines are allowed.
- Buckley Yokes are allowed.
- A driveline safety strap or driveline hoop restraint constructed of .065” steel, either welded or bolted to the chassis, is mandatory.
- A steel or approved aluminum shield covering the flywheel is mandatory when the bell housing is inside the cockpit.

5. Rear-End

- Any conventional quick-change rear-end is allowed.
- Maximum 2” offset allowed.

6. Brakes

- Must have a minimum left-front and left inboard rear brake system. All brakes must work at the start of the event. Rear brakes must work at all times. An additional rear brake is allowed.
- Carbon fiber rotors are not allowed.
- No copper or plastic brake lines are allowed.

7. Bumpers

- Bumpers and nerf bars must be Sprint Car type bars, constructed of no less than 1” O.D. and a minimum .060” wall thickness, and securely bolted to the chassis with minimum ¼” bolts.
- Side nerf bars may have a triangular or 4-point configuration and cannot extend outside the rear tires.
- The front bumper cannot extend more than 8 inches from the frame or 23½ inches from the center of the front axle to the front of the front bumper.
- “Battle Bar” type side bar highly recommended (long nerf bar with front mount past the motor mount).

8. Wheels

- Maximum wheel width: Front 10”, Left Rear 15”, Right Rear 18”.
- Bead locks on all wheels are recommended.
- Bleeders are not allowed.
- Wheel covers are allowed.
- Wheel covers need to be fastened with 1/4” bolts or 5 dzuses.
- Wheel covers must be marked with the car number.
- If you lose a wheel cover, a caution will be called, and you will go to the back.

9. Tires — Note: tire rule subject to changes from Hoosier Tire

- **Right Rear:** The right rear tire can only be used on the right rear of the car. The following tires may be used: Hoosier 105/16.0-15 MED (Medium or Medium-1) or Hoosier 105/16.0-15 H15 or D15A that has been used in competition. Maximum allowable tread depth is 0.175”. Tread depth is measured in any anti-blister hole in the center of the tread block, pre-race.

- **Left Rear:** Hoosier RC1, Hoosier H12, Hoosier SC12, or Hoosier D12A. The left rear tire can only be used on the left rear of the car.
- **Fronts:** Any Hoosier.
- All rear tires must be marked by an NRSS official before each event begins.
- Rear tires will be checked for our marks after the feature for the top 3.
- Any brand-new rear tires must be marked by an NRSS official before use. They must be put on before qualifying or the heat race, whichever comes first. The marked tires must be run all night at that event.
- Brand-new rear tires result in only being eligible for starting pay for that event.
- Teams are only allowed 5 new right rear tires per season at NRSS-only events.
- More tires may be granted in cases of extreme tire wear, but the determination will be made on the average tire wear for the whole field, not an individual car.
- Used Hoosier tires are always welcome at NRSS shows.

WARNING: DO NOT ALTER TIRES. Chemical treatment of tires: Hoosier Racing Tire and the NRSS strictly forbid any chemical alteration of the tire carcass and/or tread compound, such as tire "soaking" or use of tread "softener." Hoosier Racing Tire and the NRSS strictly forbid the physical defacement (removal, altering, or covering) of tire sidewall markings in any manner. Failure to comply with this warning could result in premature or catastrophic tire failure and may result in SERIOUS PERSONAL INJURY OR DEATH.

- Absolutely no chemical of any kind may be applied to a tire. This includes tire cleaner. The NRSS reserves the right to confiscate and test any tire at any time. Tires may be tested on a random basis. If your tire is confiscated, your check will be withheld until after testing. Tires may be tested on a random basis at UMSS expense unless the tire is found illegal. The NRSS will not reimburse teams for the tire. If found illegal, the team will have all points to that point taken away, be penalized $2,500, and be banned for 365 days.
- Bleeders are not allowed.

10. Weight

- Minimum weight is 1,550 lbs., including the fully suited driver. **NOTE:** There will likely be an adjustment to weight or materials allowed on the car after the rules freeze is up (2027).
- You can be weighed at any time during the event.
- Any added weight must be in block form or formed to the frame, painted white with the car number stamped on it. Weight must be securely bolted and located between the front motor plate to 12 inches behind the rear motor plate. No weight can be added, moved, or replaced during yellow or red flag conditions.
- NRSS officials reserve the right to disqualify any car whose weight mounting procedure or location does not satisfy our specifications (see illustration below).

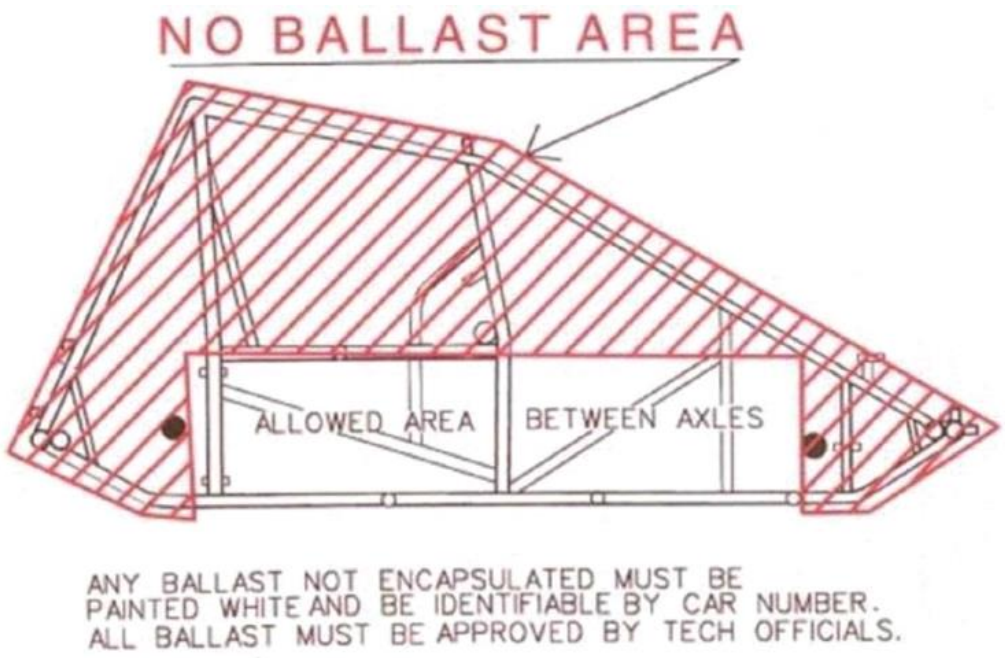

Ballast placement diagram. No ballast is permitted in the shaded area; ballast is allowed only in the area between the axles. Any ballast not encapsulated must be painted white and identifiable by car number. All ballast must be approved by tech officials.

NOTE: No added weight will be allowed in the open area under the seat. It will be allowed only in the open area in front of the firewall per the rule above.

PART III — WING SPRINT SPECIFICATIONS

Engine Specifications

There are four engines that are legal in this series. All engines are subject to pumping, whistling, and/or teardown by officials at any time.

In 2025, adjustments were made to the Chrysler/Mopar engine rules. This will create more parity with this engine package, and it will continue to be closely monitored.

Teams using the Chrysler engine will be allowed the Magnum heads and Edlebrock Victor 2915 or 7545 intake.

Please keep in mind that the NRSS will correct any items deemed to be costing racers too much money after the 2027 season. As much notice as possible will be given for these corrections, but every effort will be made to keep this class affordable and fun.

360 Engine

1. Block

- Any Chevrolet 350 CI stock iron block that was available in a passenger car or truck is allowed. The maximum overbore allowed is .060”.
- Any Ford 351 Windsor stock iron block that was available in a passenger car or truck is allowed. The maximum overbore allowed is .060”. Cleveland, M, or Clevor engines are not allowed.
- Any Chrysler 340 or 360 CI stock iron block that was available in a passenger car or truck is allowed. Maximum overbore allowed is .060” for the 340 and .040” for the 360.
- No interchange of crankshafts or rods to blocks is allowed.
- Absolutely no lightening of any kind is allowed. All mounts must remain. This includes the fuel pump, motor mounts, and all other stock mounts.
- OEM factory 2- or 4-bolt main blocks are the only blocks allowed. Two-bolt blocks cannot be converted to a four-bolt block. Splayed main caps are not allowed.

2. Crankshaft

- Any stock production crankshaft is allowed. Interchanging of crankshafts to blocks is not allowed. The crankshaft stroke must match the block.
- The following aftermarket crankshafts are allowed:
  - Chevrolet 350 — Scat (Part # 9-10442), Eagle (Part #s 103503480, 103503480CM, and 103523480)
  - Ford 351 — Scat (Part # 9-351-3500-5955-2311)
  - Chrysler 340, 360 — Scat (Part #s 9-340-3580-6123, 9-360-3580-6123), Eagle (Part #s 103403310, 103603580)
- No lightening, counterweight knife edging, or counterweight polishing is allowed. Balancing is allowed.
- The crankshaft flange may be machined to fit the rear motor plate and torque ball housing. Any crankshaft or connecting rod with a part number superseded by the manufacturer is legal as long as the crankshaft or connecting rod with the superseded part number has the same specifications as the legal crankshaft or

connecting rod.

3. Connecting Rods

- Any stock OEM steel production connecting rod is allowed.
- The following aftermarket connecting rods are allowed:
  - Chevrolet 350 — Scat OEM replacement I-Beam (must say Scat 5.7), Eagle OEM I-Beam (Part #s SIR5700BBLW, SIR5700BPLW)
  - Ford 351 — Eagle I-Beam (Part #s SIR5956FP, SIR5956FB)
  - Chrysler 340, 360 — Eagle I-Beam (Part #s SIR6123CP, SIR6123CB)
- Chevrolet 5.7” powdered metal connecting rods are allowed in Chevrolet engines.
- The connecting rod length must match the block. Interchanging of connecting rods to blocks is not allowed.
- Grinding or polishing of connecting rod beams is not allowed. Connecting rod balance pads may be machined to balance rotating and reciprocating mass. One big-end and one small-end balance pad must remain stock.
- Cap screws are not allowed except on designated Eagle OEM rods. The maximum rod bolt diameter is 3/8”.

4. Pistons

- Any forged or cast aluminum piston is allowed. Pistons made of anything other than aluminum are not allowed.
- Engines must not exceed a 9.50:10 compression ratio. No exceptions!

5. Camshaft

- Camshafts and lifters must be hydraulic. No other camshafts or lifters are allowed.
- Lifters must collapse a minimum of .100”.
- Interchanging lifters between engine manufacturers is not allowed.
- Lifters must rotate freely and be manufactured of magnetic material.
- Camshaft belt or gear drives are not allowed.
- Camshafts may be drilled for a rear spud.
- No lightening, grinding, or polishing is allowed.

6. Cylinder Heads

- The cylinder head must be a stock cast iron production head. The only aftermarket heads allowed are Engine Quest (EQ) part #CH350I.
- Chevrolet 1987–1995 Swirl Port heads are allowed.
- Ford 302 GTP heads are allowed.
- Vortex, Bowtie, SVO, W-2, Magnum, Gen II, and angle plug heads are not allowed.
- The following Chevrolet casting numbers are not allowed: 040, 041, 186, 187, 291, 370, 414, 432, 461, 461X, 462, 492, 10125320, 10208890, 10239906, 12554290, 14011083, or 14096217.

- Industry-standard cylinder head reconditioning is allowed. No other machine work outside of industry-standard reconditioning is allowed.
- Carbide cutter relief cuts are allowed below the valve seat but must not exceed more than ¼ inch below the top of the valve seat. Minor variances will be allowed in the depth of the relief cut below the valve seat, at the discretion of UMSS Technical Officials, to allow for variances in cylinder head casting and manufacturing.
- Porting or polishing of any kind is not allowed.
- Angle milling is not allowed.
- Valve spring diameters cannot exceed the valve spring diameter of stock OEM production springs. Tapered or Beehive valve springs are not allowed.
- Stock-appearing stamped steel rocker arms are the only legal rocker arms on Chevrolet and Ford engines. Chrysler engines may use the stock-type stamped steel or stock OEM forged iron adjustable rocker arms. Roller or roller-tipped rocker arms are not allowed.
- Screw-in rocker arm studs and pushrod guide plates are allowed on Chevrolet and Ford engines. Chrysler rocker arms must be shaft mounted. Pushrods may be hardened but must have a stock diameter and length.
- Stud girdles are not allowed.

7. Intake Manifolds

- All engines must use the following intake manifold part numbers:
  - Chevrolet — Weiand (Part # 7546, 7467, or 7547-1 X-CELerator)
  - Ford — Weiand (Part # 7515, 8023), Professional Products (Part # 54033)
  - Chrysler — Weiand (Part # 7545)
- Porting, polishing, or gasket matching of any kind is not allowed.

8. Oiling System

- Wet sumps are required. Dry sumps are not allowed. The oil pump must be located in the crankcase.
- A minimum 3/4-inch (1 inch recommended) inspection hole in the side of the oil pan, 2½ inches down from the pan rail and in line with a journal, is required. Removing the pan may be required if further inspection is necessary.

9. Ignition, Starter & Electronics

- All battery-powered ignitions and magnetos are allowed. A magneto-type ignition is recommended. External coils are allowed.
- Cars must have a clearly marked ON/OFF switch within reach of the driver and visible to officials.
- Only one battery is allowed. The battery must be securely hard-mounted and shielded.
- On-board starters are allowed.
- A tachometer is the only electronic monitoring device capable of storing or transmitting information allowed.
- Electronic traction control devices are not allowed.
- MSD-type magnetos are not allowed.

- The ignition firing order must remain stock.

10. Exhaust

Same as Traditional Sprint Specifications — 360 Engine, Section 10 (Exhaust).

11. Water Pump & Radiator

- Any stock-type water pump is allowed.
- The radiator must be in front of the engine.

12. Carburetor

- A 2- or 4-barrel carburetor is allowed, from 500 to 750 CFM.
- No billet carburetor center sections are allowed.
- Billet base plates are allowed.
- A minimum of two return springs must be connected to the throttle.
- The throttle pedal must have a toe strap.
- No Willy’s Equalizer carburetor.
- Aftermarket metering blocks are allowed.
- Modifying the carburetor for alcohol is allowed.
- The carburetor venturi and booster diameters must remain stock.
- The carburetor choke tower may be removed.
- No carburetor spacer rule.

13. Fuel

- Racing methanol is required. Gasoline is not allowed.
- Nitro, nitrous oxide, or any other oxidizer, with the exception of methanol, is not allowed.
- No fuel additives, with the exception of upper cylinder lubricants, are allowed. Fuel is subject to inspection at any time.

14. Fuel Pump

- A mechanical, belt-driven, or cam-driven fuel pump is allowed. Cam-driven fuel pumps are highly recommended.
- Electric fuel pumps are not allowed.

15. No Titanium, Inconel, Ceramics, DLC, or Nikasil components are allowed.

5.3 Liter LS Engine

1. Block

- A factory production iron block is required. Aluminum, bow-tie, or aftermarket blocks are not allowed. The maximum overbore allowed is .060”.
- No interchanging of crankshafts or rods to blocks is allowed.

- Absolutely no lightening of any kind is allowed. All mounts must remain. This includes the fuel pump, motor mounts, and all other stock mounts.
- Oversized and roller cam bearings are not allowed.

2. Crankshaft

- A stock OEM Chevrolet crankshaft, with a stroke length of 3.622”, is the only crankshaft allowed.
- No lightening, counterweight knife edging, or counterweight polishing is allowed. Balancing is allowed.
- The crankshaft flange may be machined to fit the rear motor plate and torque ball housing.
- 24- and 58-tooth reluctor wheels are allowed. Note: Ensure the MSD box is the correct one for the reluctor wheel before ordering.

3. Connecting Rods

- Chevrolet OEM powdered metal connecting rods with a 6.098” center-to-center length are the only connecting rods allowed.
- Connecting rod bolts may be replaced. Small ends may be bushed and fitted for floating pins. Big ends may be resized to factory specs.
- Grinding or polishing of the connecting rod beams is not allowed. Connecting rod balance pads may be machined to balance rotating and reciprocating mass. One big-end and one small-end balance pad must remain stock.

4. Pistons/Rings

- Any forged or cast aluminum piston is allowed. Pistons made of anything other than aluminum are not allowed.
- Engines must not exceed a 9.50:10 compression ratio with the heads and gasket installed. No exceptions!

5. Cam/Lifters

- Only stock, unaltered, GM part number lifters are allowed.
- The rocker arms must be stock or a stock-type replacement. Roller-tip rockers are not allowed.
- Rocker arm trunnions may be upgraded to allow more lift if needed. No other modifications are allowed.
- Push rods must be a stock, or stock-type replacement, with a 5/16” diameter.
- The maximum lift at the valve is .600”.
- The camshaft may be drilled for a rear spud.
- No lightening, grinding, or polishing is allowed.

6. Cylinder Heads

- Chevrolet OEM aluminum cylinder heads are required. No other cylinder head is allowed.
- The cylinder heads must have a casting number ending in 862 or 706. No other casting number is allowed.
- Industry-standard head reconditioning is allowed. No other machine work outside of industry-standard reconditioning is allowed.

- The valves may be replaced, but the replacement valves must have a stock stem diameter, stock length, and a stock head diameter (1.89” intake, 1.55” exhaust).
- The seats and guides may be replaced.
- Carbide cutter relief cuts are allowed below the valve seat but must not exceed more than ¼ inch below the top of the valve seat. Minor variances will be allowed in the depth of the relief cut below the valve seat, at the discretion of UMSS Technical Officials, to allow for variances in cylinder head casting and manufacturing.
- Angle milling is not allowed.
- No porting, grinding, or polishing of any kind is allowed.
- Valve springs must be a single beehive spring and stock-appearing.

7. Intake Manifolds

- All 5.3 LS engines must use the Edlebrock Victor Jr. part number 29087 intake or Holley 300-132 single plane.
- No modifications are allowed.
- No porting, polishing, or grinding of any kind is allowed.

8. Oiling System

Same as 360 Engine, Section 8 (Oiling System), above.

9. Ignition, Starter & Electronics

- An MSD #6010, MSD #6014, MSD #6014CT, or MSD #60143 ignition controller is required. No other ignition controller is allowed.
- Stock or stock-appearing replacement coil packs are allowed. Performance coil packs (i.e., Accel, MSD, etc.) are not allowed.
- At this time, no rev limit restrictions will be imposed, but the NRSS reserves the right to change this rule in order to guarantee parity between engine options.
- Cars must have a clearly marked ON/OFF switch within reach of the driver and visible to officials.
- Only one battery is allowed. The battery must be securely hard-mounted and shielded.
- An on-board starter is allowed.
- No electronic monitoring devices capable of storing or transmitting information are allowed, except for a memory tachometer.
- No electronic traction control devices are allowed.
- The ignition firing order must remain stock.

10. Exhaust

Same as Traditional Sprint Specifications — 360 Engine, Section 10 (Exhaust).

11. Water Pump & Radiator

- Any stock-type (LS or small block) water pump is allowed.
- The radiator must be in front of the engine.

12. Carburetor

Same as 360 Engine, Section 12 (Carburetor), above.

13. Fuel

Same as 360 Engine, Section 13 (Fuel), above.

14. Fuel Pump

Same as 360 Engine, Section 14 (Fuel Pump), above.

Chevrolet 604 Crate Engine

A sealed Chevrolet 604 crate engine is legal. See the NRSS Technical Director for guidance on competing with the Chevrolet 604. The engine must have factory GM seals, and all other rules must be followed.

Engines will be randomly inspected for legality during the season. If an engine is inspected at the track, it will be done at no cost to the driver. If a driver prefers to have their engine inspected at a shop of the driver's choosing, a tech fee will be imposed. If a sealed engine is found to be nonconforming, the driver will be disqualified for one year, fined $2,500, and must return all prize money earned during the current season.

Contact the NRSS Technical Director if you have any questions.

Dyno Rule

Same as the Dyno Rule under Traditional Sprint Specifications (Part II).

Car Construction & Chassis Specifications

See the Car Construction & Chassis Specifications section under Traditional Sprint Specifications.

Tires

See Section 9, Tires, under Car Construction & Chassis Specifications in the Traditional Sprint Specifications.

Wing Specifications

1. Top Wing

- The maximum size of the top wing center foil is 25 square feet. The maximum width of the top wing center foil is 60 inches.
- The top wing center foil must be fully sheathed in aluminum. Vent holes are strictly prohibited.
- Wicker bills or gurney lips are only permitted on the center foil of FLAT wings. The gurney lip or wicker bill must not exceed 1" in height. Wicker bills and gurney lips are not allowed on curved top wings.
- Other than the tree mechanism, no moving parts are allowed on or in the foil structure.
- The 12-inch section located at the rear of the center foil must not have the belly/curl arc out of proportion with the rest of the center foil. The belly/curl arc must span the entire length of the center foil and appear to be a gradual arc, with the deepest point no further back than 48 inches from the leading edge. As measured on a 12-inch straight edge, the belly at 6 inches from the rear of the foil may not be deeper than

½ inch. There is zero tolerance on this ½-inch depth. It is suggested that the wing blueprint specify a 15/32-inch depth, so that if any deflection or movement of the wing occurs, the depth will not exceed the ½-inch specification (this ½-inch measurement ensures that the belly/curl arc is gradual).

- The belly/curl arc must start at the radius of the center foil's leading edge and shall not exceed a depth of 2½ inches. Center foil thickness cannot exceed 9 inches. The center foil top surface from side to side must remain flat. The center foil must be one-piece construction. No split or bi-wings will be permitted. Wings must be fabricated of metal alloys only. No fiberglass, carbon fiber, or other similar material may be used in the basic framework of the wings. The top wing must not extend beyond the outside of the rear tires.
- Two stationary foils or rudders will be allowed to run the entire length of the underneath portion of the top wing. Maximum height proportions are 1 inch at the front and 3 inches at the rear. The foil must not exceed 3 inches in height.
- No wing sliders are allowed. The top wing may not be cockpit- or driver-adjustable while the car is stationary or in motion.
- The top wing must not have an angle that exceeds 20 degrees when measured with the car on a flat surface. The wing angle will be measured with a straight edge approximately 6 feet in length. The straight edge will have an angle finder attached. When checking the wing angle, the straight edge will be placed on the ground, parallel to the car, and the angle finder will be zeroed. The straight edge will then be placed on top and center of the wing. One end of the straight edge will be placed on the front lip of the center foil, and the other end of the straight edge will be placed on the rear edge of the center foil. If the wing has a wicker bill, the end of the straight edge will be placed directly in front of the wicker bill. The angle delta between the ground and the wing will then be measured. There is no tolerance. The NRSS Technical Director may allow a small tolerance if the ground is uneven, but a driver should not depend on that when setting the wing angle. Make sure the wing angle is less than 20 degrees. Effective June 1, 2023, the NRSS will measure wing angle for tech purposes only just before and/or just after heats or feature.

2. Front Wing

- The maximum size of the front wing center foil is 6 square feet. The maximum width of the front wing center foil is 36 inches.
- The center foil must be fully sheathed in aluminum. No vent holes are allowed.
- Wicker bills or gurney lips are permitted on the front wing center foil. The maximum height of the wicker bill or gurney lip is 1".
- The maximum distance from the front edge of the front wing center foil to the front edge of the front axle must not exceed 20 inches.
- The front wing must be mounted with the front edge of the front wing center foil at least 1" behind the front edge of the front bumper. The front wing center foil must be mounted flat from side to side.
- The front wing center foil must be one piece. No split or bi-wings are allowed.
- The front wing must be fabricated of metal alloys only. No fiberglass, carbon fiber, or other similar material may be used in the basic framework of the wings.
- The front wing must not extend beyond the outside of the front tires. The front wing may not be cockpit- or driver-adjustable while the car is stationary or in motion.
- No moving parts are allowed on or in the front wing foil structure.

- The 5” section located at the rear of the front foil must not have a belly/curl arc that is out of proportion with the rest of the front foil. As measured on a 5-inch straight edge, the belly at 2½ inches from the rear of the foil may not be deeper than 3/8 inch. There is zero tolerance on this 3/8-inch depth. It is suggested that the wing blueprint specify an 11/32-inch depth, so that if any deflection or movement of the wing occurs, the depth will not exceed the 3/8-inch specification (this 3/8-inch measurement ensures that the belly/curl arc is gradual).
- The belly/curl arc must span the entire length of the front foil and appear to be a gradual arc, with the deepest point no further back than 12 inches from the leading edge. The belly/curl arc must start at the front foil’s leading edge and shall not exceed a depth of 2 inches. Top foil thickness cannot exceed 3.6 inches.
- No rudders or fins are allowed on the front wings.

— End of the 2027 Northern Renegade Rule Book —